Transactions of the SAEST 38 (2003) 135 - 137

Transactions of the SAEST

Galvanic Protection of Steel in Concrete Using Magnesium Based Strip Anode

H.Dolli*, G.Venkatachari, N.S.Rengaswamy and M.Raghavan

Central Electrochemical Research Institute, Karaikudi, India

Received : 13 March 2003 *Accepted:* 20 July 2003

Performance of magnesium based strip anode in giving galvanic protection to steel embedded in concrete has been evaluated under two exposure conditions viz normal exposure under 100% RH and alternate wetting and drying cyclic exposure. Two grades of concrete viz lean grade concrete and a medium grade concrete have been used. It is seen that magnesium strip anode can confer efficient protection to steel embedded in concrete irrespective of grade of concrete or nature of exposure.

Keywords: Galvanic protection, magnesium anode, reinforced concrete, galvanic current, depolarisation shift.

1. Introduction

Though impressed current as well as galvanic current systems have been considered for cathodic protection of steel embedded in concrete, galvanic or sacrificial anode systems are simpler to install. Since the current flows and voltages are lower than in the impressed current systems, the risk of hydrogen embitterment is lower. The most successful and extensive application has been in the splash and tidal zones of prestressed concrete piles and epoxy-coated reinforcing steel in substructures supporting bridges in the Florida Keys. Either zinc has been thermally sprayed or zinc sheets have been clamped to the surface [1]. Zinc sheets with an adhesive gel has also been used [2]. According to Broomfield [3], aluminium and zinc-aluminium alloys pose application and installation problems. Recently chemicals have been used to increase the moisture around the anode and improve the effectiveness [4]. Among the three well-known sacrificial anode systems viz zinc, aluminium and magnesium alloys, magnesium alloys have the highest driving voltage and should have been the obvious choice [5]. Since magnesium as sacrificial anode has the lowest efficiency, it has not been widely studied. However the driving voltage between the anode and cathode is a function of the relative electrode potentials of the anode and cathode materials in the particular medium.

In the present study, galvanic protection of steel embedded in lean grade concrete and medium grade concrete by using magnesium based strip anode has been investigated under two different exposure conditions. viz normal exposure to 100% RH and alternate wetting in 3%NaCl solution and drying cycle. The following parameters have been regularly monitored over and exposure period of 100 days. a) Open circuit potential of steel embedded in concrete b) Galvanic current flow between steel and magnesium anode and c) four hour polarisation decay. It is shown that in the case of lean grade concrete; exposure conditions have no specific influence. On the other hand, in the medium grade concrete, alternate wetting with 3% NaCl and drying cycle has distinct influence marked by a more negative potential for steel, three fold increase in galvanic current flow and an increase in four hour depolarisation shift from 400 to 550mV. In general, medium grade concrete has recorded higher depolarisation shifts compared to lean grade.

2. Experimental

Figure 1 shows the dimensional details of concrete prism used in this evaluation study. The mix proportion as well as the compressive strength of concrete is given in Table-1. Two numbers of cold twisted rebars 16 mm in diameter and 200 mm of exposed length were derusted in standard pickling solution containing hydrochloric acid and hexamine, rinsed in running tap water, air dried, degreased with trichloroethylene and embedded in concrete as shown in figure-1. Before embedment in concrete electrical leads were taken from one end, which was masked with epoxy putty. A newly developed maintenance free reference electrode based on MnO_2 was also embedded at the same level as rebars as shown. Solar distilled water containing no chloride was used for casting.

* *Corresponding author:*

0036 - 0678 - 00 /38 - 4 - 135 $ 2.00 © 2003 SAEST

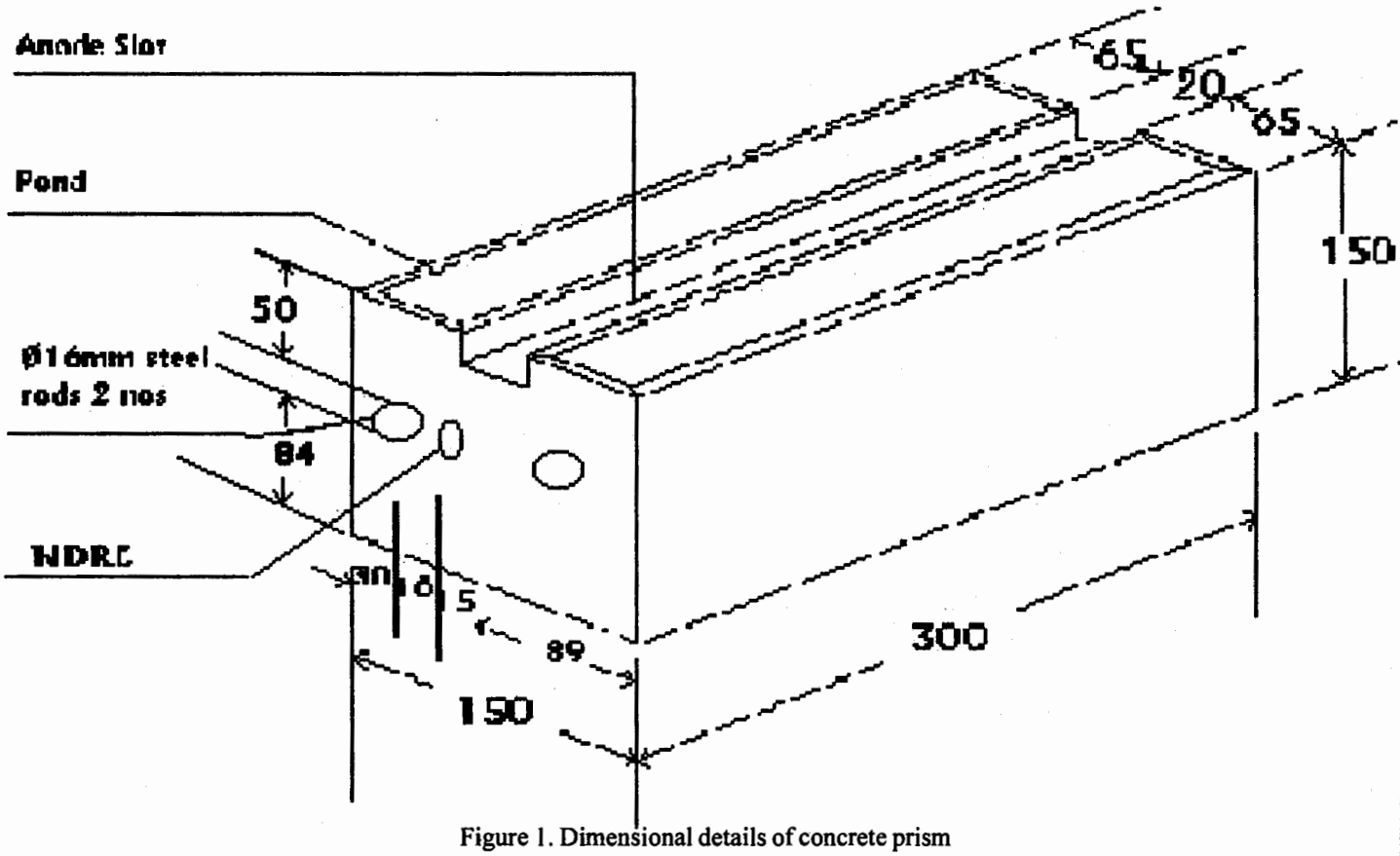

Figure 1. Dimensional details of concrete prism

Table 1. Details of concrete mix proportions

Sl. No	Constituent	Lean Grade	Medium Grade
1	Ordinary Portland Cement	1 part	1 part
2	Washed river sand	3.3 part	1.53 part
3	Granite stone course aggregate	6.9 part	1.93 part
4	Solar distilled water	0.80 part	0.50 part
5	Compressive strength (N/mm^2)	12.5±1	35±2

Concrete prisms after demoulding were cured in tap water for a period of 7 days. At the end of 7 days, the concrete prisms were removed from the curing tank air dried to remove surface moisture and then transferred to the exposure tank for evaluation studies under 100% RH. To ensure reproducibility, duplicate experiments were concurrently carried out.

Two kinds of exposure studies were performed. One was a natural atmospheric exposure under 100% RH and another was wetting with 3% NaCl solution for a period of 8 hours and air drying for a period of 16 hours. i.e. one alternative wetting and drying cycle per day.

Before commencement of exposure, open circuit potential of embedded steel rebars was measured with respect to the adjoining embedded reference electrode (EE) and also with respect to a surface mounted reference electrode (SE). For cross checking, potential was also measured with respect to a standard saturated calomel electrode, which was surface mounted.

After measuring the initial open circuit potential of embedded rebars, electrical leads were short-circuited and the common potential was recorded. A 2.5 mm thick, 15 mm wide and 150 mm long strip type commercially pure magnesium anode specimen was laid in the slot over a bed of river sand and cotton pad periodically wetted with tap water to ensure ionic conductance. The anode potential was measured with respect to a standard calomel electrode. Electrical lead was taken from the anode and short circuited with the common terminal taken from the leads of embedded steel rebars. A 100 ohms resister was introduced in between. The potential of the embedded steel rebars got shifted in the cathodic direction and the polarized potential was noted. The galvanic current flowing through the system was measured across the resister and noted. At the end of every 10 days of galvanic protection, circuit was broken and the 4-hour polarization decay behavior was monitored. The circuit was then closed and galvanic protection was allowed to go on for another 10 days. The data were collected and the exposure studies continued.

For comparison, companion prisms without cathodic protection were concurrently exposed. Open circuit potentials

of embedded rebars were periodically monitored in these companion specimens.

The exposure studies were carried out over a period of 100 days. At the end of every 10 days, the following data were collected.

a) Open circuit potential of embedded rebars (In companion prisms)
b) Anode potential
c) Galvanic current
d) Polarization decay
e) Electrical resistivity of the concrete

3. Results and Discussion

The comparative data for both the mix grades at the end of an exposure period of 100 days are given in table 2

Table 2. Comparative data value at the end of 100 days of exposure for lean grade and medium grade concretes.

Sl.No	Parameters	Normal exposure		Alternate wetting and drying	
		Lean	Medium	Lean	Medium
1	OCP of embedded steel mV vs. SCE	-250 to -350	-110	-300	-300
2	Galvanic current mA/m^2	160	50	180	150
3	4 hr Depolarisation shift in mV	300	400	275	550

3.1. a) M10 grade concrete

It can be seen from table 2 that the open circuit potential of steel is of the order of -300mV vs SCE under normal exposure as well as alternate wetting and drying exposure conditions. This is not surprising since in such a porous concrete, embedded steel will tend to become active even under normal ambient condition. Galvanic current flow is more or less of same order. Four-hour depolarisation shift is also of the same order under the two exposure conditions. Interestingly the shift is around 300 mV, which is very much higher than the normally recommended value of 150 to 200 mV [6]

3.2. b) M30 grade concrete

It can be seen from table 2 the at the end of 100 days of exposure, the open circuit potential of embedded steel is indicative of passive condition (i.e.-110mV vs. SCE) under normal exposure, whereas it is indicative of active condition (i.e.-300 mV vs SCE) under alternate wetting with 3% NaCl solution and drying. Correspondingly galvanic current flow is only 50 mA/ m^2 under normal exposure where as it is three times higher that is 150 mA/m^2 under alternate wetting and drying cycle.

Four-hour depolarisation shift is 400mV under normal exposure condition and 550mV under alternate wetting and drying. Compared to the shift obtained in lean grade concrete, this shift is very much higher.

The above data indicate that magnesium based strip anode is performing efficiently in both the lean grade and medium grade concretes. In the case of lean grade porous concrete, design parameters might be independent on the exposure condition. However when the concrete is sufficiently richer (i.e. medium grade concrete), exposure conditions have distinct influence and accordingly the design parameters will have to be modified to ensure optimum performance.

4. Conclusions

The following broad conclusions can be derived from the present study.

1) Magnesium based strip anode confer effective galvanic protection to steel embedded in concrete irrespective of grade of concrete and nature of exposure.
2) Nature of exposure has distinct influence with regard to design parameters in the case of steel embedded in medium grade concrete.
3) Performance of magnesium strip anode is independent of exposure conditions, when the concrete is of lean grade.

5. Acknowledgement

The financial support given to this programme by the Council of Scientific and Industrial Research, New Delhi, under emeritus scientist scheme vide HRDG No 21 (0458)/ 99-EMR II dated 12/11/99 is gratefully acknowledged.

References

1. R.J.Kessler, R.G. Powers and I.R. Lasa paper No516, Corrosion 95, NACE International, Houston Texas 1995.
2. R.J.Kessler, R.G. Powers and I.R. Lasa paper No516, CORROSION 95, NACE International, Houston Texas 1997
3. J.P. Broomfield, Uhiligs Corrosion Hand book, Edited by R. Winston Revie Published by John wille & Sons, New York (2000) 581-599.
4. J.Bennet, paper No. 640. Corrosion 98, NACE International Houston, Texas 1998.
5. A.W.Peabody "Control of pipe line corrosion", Published by NACE, Texas (1967) Chapter 10, 116-127.
6. K.Takewaka, Cathodic Protection of Reinforced Concrete and Prestressed Concrete Structures, Corrosion science 35 (1993) 1.617-1.626.